null | furniture

ASSEMBLY INSTRUCTION

ITEM NO:6023-01

COCKTAIL TABLE

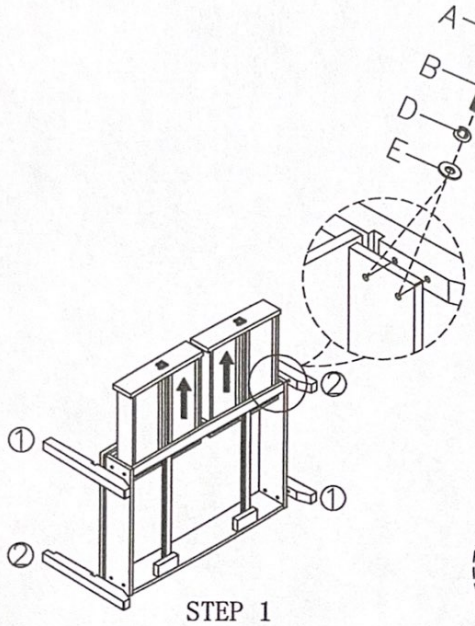

STEP 1

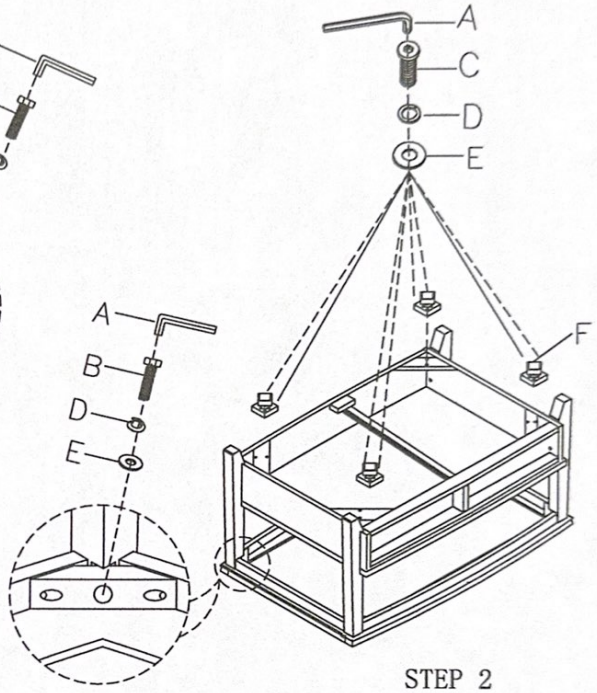

STEP 2

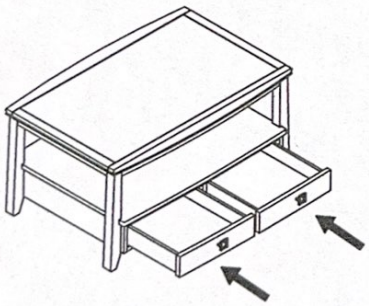

STEP 3

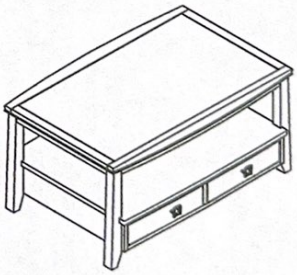

Item	Sketch	Description	Qty
A		Allen Wrench 1/4″	1 PC
B		Bolt 1/4″x1-3/4″	12 PCS
C		Bolt 1/4″x1-1/2″	8 PCS
D		Lock Washer 1/4″	20 PCS
E		Flat Washer 1/4″x16mm	20 PCS
F		Casters	4 PCS

DO NOT TIGHTEN SCREWS
UNTIL COMPLETELY ASSEMBLED